UNIK-H Series

30~650 Ton (high-cycle type / speed 30% improved)

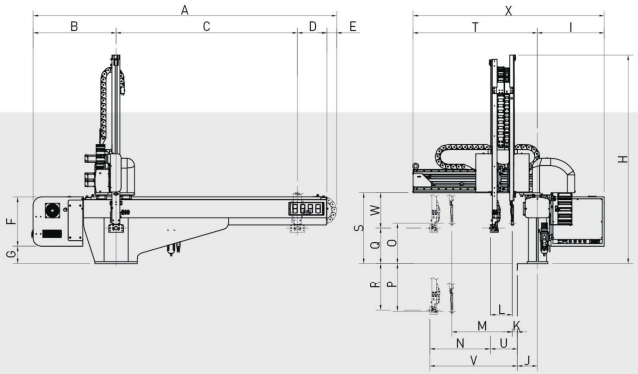

Power : 1Phase AC220V(50/60Hz)
Driving Method : Digital Servo Motor
Control Method : Micro Computer
Air Pressure : 6 kgf/㎠
Max. Air Pressure : 8 kgf/㎠
Chuck Rotation : 90°

Dimension

Unit : ㎜ / ( )mark signify L Type, [ ]mark signify LL type.

Model	A	B	C	D	E	F	G	H	I	J	K	L	M	N	O	P	Q	R	S	T	U	V	W	X
UNIK-80SH	2114 (2314)	600	1200 (1400)	218	96	350	234	1356	442	100	-	-	-	585	-	-	150	500	419	928	80	665	269	1370
UNIK-80DH											81	134	450	450	175	526					215			
UNIK-200SH	2509 (2709) [2909]	686	1500 (1700) [1900]	244	80	400	141	1722	552	165	-	-	-	660	-	-	288	512	576	1027	64	724	288	1579
UNIK-200DH											42	182	500	500	328	522					224			
UNIK-300SH	2509 (2709) [2909]	686	1500 (1700) [1900]	244	80	400	141	1822	552	165	-	-	-	835	-	-	288	662	576	1207	64	899	288	1759
UNIK-300DH											42	182	675	675	328	622					224			
UNIK-400SH	2714 (3014)	686	1700 (2000)	244	85	400	141	1972	552	165	-	-	-	835	-	-	288	812	576	1207	64	899	288	1759
UNIK-400DH											42	182	675	675	328	772					224			

Technical specification

Model	Traverse (㎜)			Vertical (㎜)		Crosswise (㎜)		Max. Electric Consumption	Air Consumption [ℓ(normal)/Cycle]	Max. Payload (Chuck Included)	I.M.M (Ton)
	Standard	L-Type	LL-Type	Main Arm	Sub Arm	Main Arm	Sub Arm				
UNIK-80SH	1200	1400	-	650	-	585	-	1 Phase / AC 220V S: 6.8A / D: 10.9A	6	3 Kgf	30~80
UNIK-80DH					700	450	450				
UNIK-200SH	1500	1700	1900	800	-	660	-	1 Phase / AC 220V S: 6.8A / D: 10.9A	6	5 Kgf	100~250
UNIK-200DH					850	500	500				
UNIK-300SH	1500	1700	1900	950	-	835	-	1 Phase / AC 220V S: 6.8A / D: 10.9A	7	5 Kgf	180~300
UNIK-300DH					950	675	675				
UNIK-400SH	1700	2000	-	1100	-	835	-	1 Phase / AC 220V S: 6.8A / D: 10.9A	7	5 Kgf	280~450
UNIK-400DH					1100	675	675				

All information subject to change without notice for quality improvements.

UNIK-II-H Series

100~1800 Ton (high-cycle type, telescopic arm (2 step) / speed 30% improved)

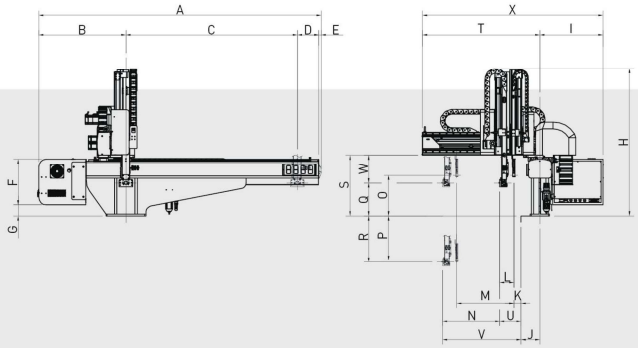

Power : 1Phase AC220V(50/60Hz)
Driving Method : Digital Servo Motor
Control Method : Micro Computer
Air Pressure : 6 kgf/㎠
Max. Air Pressure : 8 kgf/㎠
Chuck Rotation : 90°

Dimension

Unit : ㎜ / ( )mark signify L Type, [ ]mark signify LL type.

Model	A	B	C	D	E	F	G	H	I	J	K	L	M	N	O	P	Q	R	S	T	U	V	W	X
UNIK-II-200SH	2470 (2670) [2870]	762	1500 (1700) [1900]	188	20	400	95	1288	552	165	-	-	-	640	-	-	286	514	530	1027	46	686	244	1579
UNIK-II-200DH											62	124	500	500	353	498					186			
UNIK-II-300SH	2470 (2670) [2870]	762	1500 (1700) [1900]	188	20	400	95	1388	552	165	-	-	-	820	-	-	286	664	530	1027	46	686	244	1759
UNIK-II-300DH											62	124	680	680	353	598					186			
UNIK-II-400SH	2714 (3014)	762	1700 (2000)	188	65	400	95	1438	552	165	-	-	-	940	-	-	138	962	530	1327	46	986	392	1879
UNIK-II-400DH											62	124	800	800	209	891					186			
UNIK-II-600SH	3025 (3225)	782	2000 (2200)	138	105	400	197	1747	552	165	-	-	-	1110	-	-	178	1322	632	1487	46	1151	454	2039
UNIK-II-600DH											62	129	960	960	228	1272					191			
UNIK-II-800SH	3710	855	2500	335	21	400	229	1986	581	235	-	-	-	1150	-	-	84	1516	620	1686	99	1249	536	2267
UNIK-II-800DH											102	187	960	960	130	1470					289			
UNIK-II-1300SH	4201	780	3000	320	102	400	476	2125	605	265	-	-	-	1585	-	-	140	1661	755	2155	124	1709	616	2761

Technical Specification

( ) is optional.

Model	Traverse (㎜)			Vertical (㎜)		Crosswise (㎜)		Max. Electric Consumption	Air Consumption [ℓ(normal)/Cycle]	Max. Payload (Chuck Included)	I.M.M (Ton)
	Standard	L-Type	LL-Type	Main Arm	Sub Arm	Main Arm	Sub Arm				
UNIK-II-200SH	1500	1700	1900	800	-	640	-	1 Phase / AC 220V S: 9.2A D: 13.3A	6	8 Kgf	100~250
UNIK-II-200DH					850	500	500				
UNIK-II-300SH	1500	1700	1900	950	-	820	-	1 Phase / AC 220V S: 9.2A D: 13.3A	7	8 Kgf	180~300
UNIK-II-300DH					950	680	680				
UNIK-II-400SH	1700	2000	-	1100 (1300)	-	940	-	1 Phase / AC 220V S: 9.2A D: 13.3A	7	8 Kgf	280~450
UNIK-II-400DH					1100	800	800				
UNIK-II-600SH	2000	2200	-	1500	-	1110	-	1 Phase / AC 220V S: 9.2A D: 13.3A	8	10 Kgf	400~650
UNIK-II-600DH					1500	960	960				
UNIK-II-800SH	2500	-	-	1600	-	1150	-	1 Phase / AC 220V S: 13.0A D: 17.1A	22	15 Kgf	550~900
UNIK-II-800DH					1600	960	960				
UNIK-II-1300SH	3000	-	-	1800	-	1585	.	1 Phase / AC 220V 13.0A	25	20 Kgf	1000~1800

All information subject to change without notice for quality improvements.